AXOR Uno
4-hole rim mounted bath mixer loop handle
Surfaces: **chrome** Article Number: **38445000**

Description

product features

- connection type: basic set
- normal and spray jet
- flow rate: 22 l/min
- ceramic valves hot/ cold 90°
- maximum pull-out length of hand shower: 1.10 m
- integrated shower support
- connection dimension: DN15
- scope of supply: handles, escutcheon, diverter, bath filler

Technology

Product image

Scale drawing

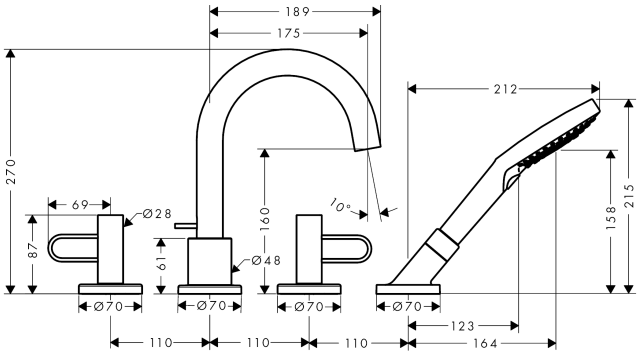

Flowchart

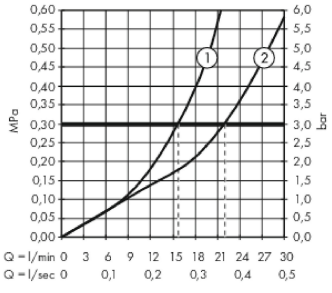

① Hand shower
② Bath spout