AXOR

hansgrohe

Talis E
Single lever shower mixer for concealed installation
Surfaces: **Matt Black** Article Number: **71765670**

Description

product features

- 1 function
- connection type: basic set
- flow rate at 3 bar: 29.3 l/min
- ceramic cartridge
- temperature limitation adjustable

Product image

Scale drawing

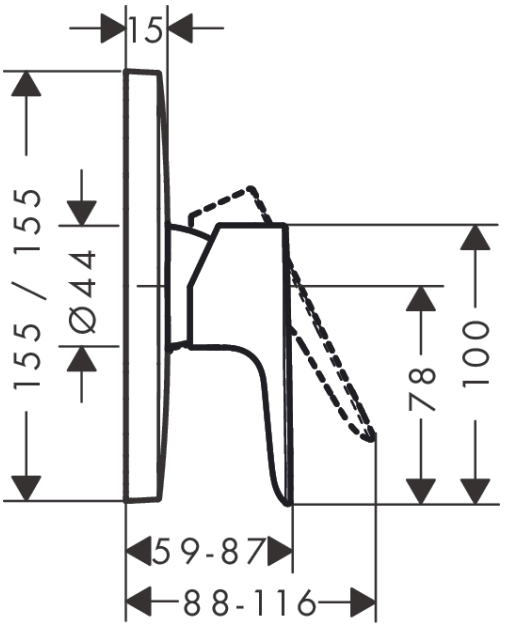
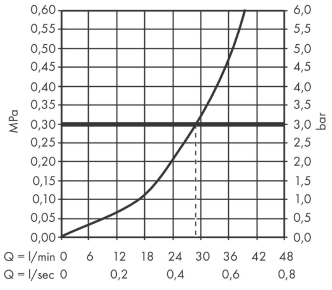
Flowchart