AXOR

hansgrohe

Talis E
3-hole basin mixer with pop-up waste set
Surfaces: **Brushed Black Chrome** Article Number: **71733340**

Description

product features

- consists of: 3-hole basin mixer, waste set
- ComfortZone 150
- projection 112 mm
- flow rate at 3 bar: 5 l/min
- ceramic valves hot/ cold 90°
- suitable for continuous flow water heaters
- pop-up waste set G 1¼
- material waste set: metal
- connection type: G ⅜ connections
- connection dimension: DN15

Technology

Product image

Scale drawing

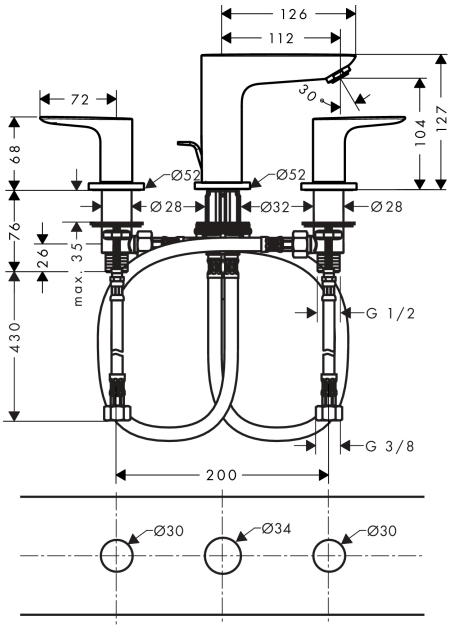

Flowchart

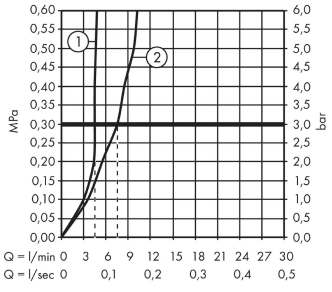

① With flow limiter
② Without flow limiter