KWC LUNA E

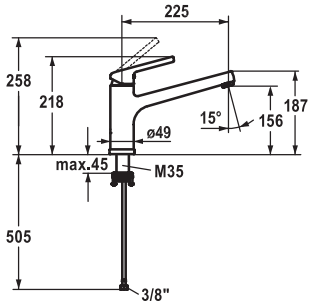

KWC-No.	Finish
10.441.043.000FL	all chrome

A 225, flexible connection hoses, detachable

Kitchen
detachable

Lever mixer
- Detachable for installation below windows - detached 55 mm
- Swivel spout 160°
  – Neoperl® Cascade®
- KWC cartridge M 35
  – with ceramic discs
  – flow rate and temperature continuously variable
- Flexible connection hoses ⅜"
- Fastening by means of threaded sleeve M35 x 1.5 (preassembled socket)
- Mounting hole size ø35 - 37 mm

Flow rate 12 l/min (3 bar)
Acoustic group I