KWC SUNO

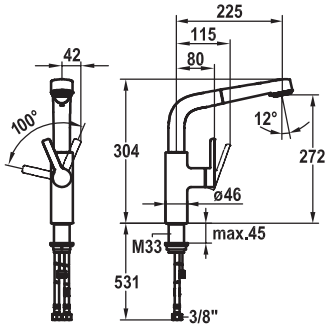

KWC-No.	Finish
10.171.003.000FL	all chrome

A 225, flexible connection hoses

Kitchen

Lever mixer
- Lever installation only possible on the right side
  - Child safety: cold water flow in lever position towards the front
- gap between wall and centre of mounting hole min. 42 mm
- TouchProtect - anti-scald protection thanks to the "double skin" principle
- Pull-out spray
  - SprayClean - easy to clean and actively prevents limescale buildup
  - up to 600 mm pull-out length
  - PowerClean - needle spray mode, with automatic diverter reset
  - hose surface to fit faucet surface
- Hose guide, swivelling 360°
- EasyLock - a pull-out spray that easily slides back into place
- OptimalSpace - ample space for washing or working
- KWC cartridge S 25
  - with ceramic discs
  - flow rate and temperature continuously variable
- Flexible connection hoses ⅜"
- Fastening by means of threaded sleeve M33 x 1.5
- Mounting hole size ø35 mm

Flow rate normal spray 10 l/min (3 bar)
Flow rate needle spray 10 l/min (3 bar)
Acoustic group I