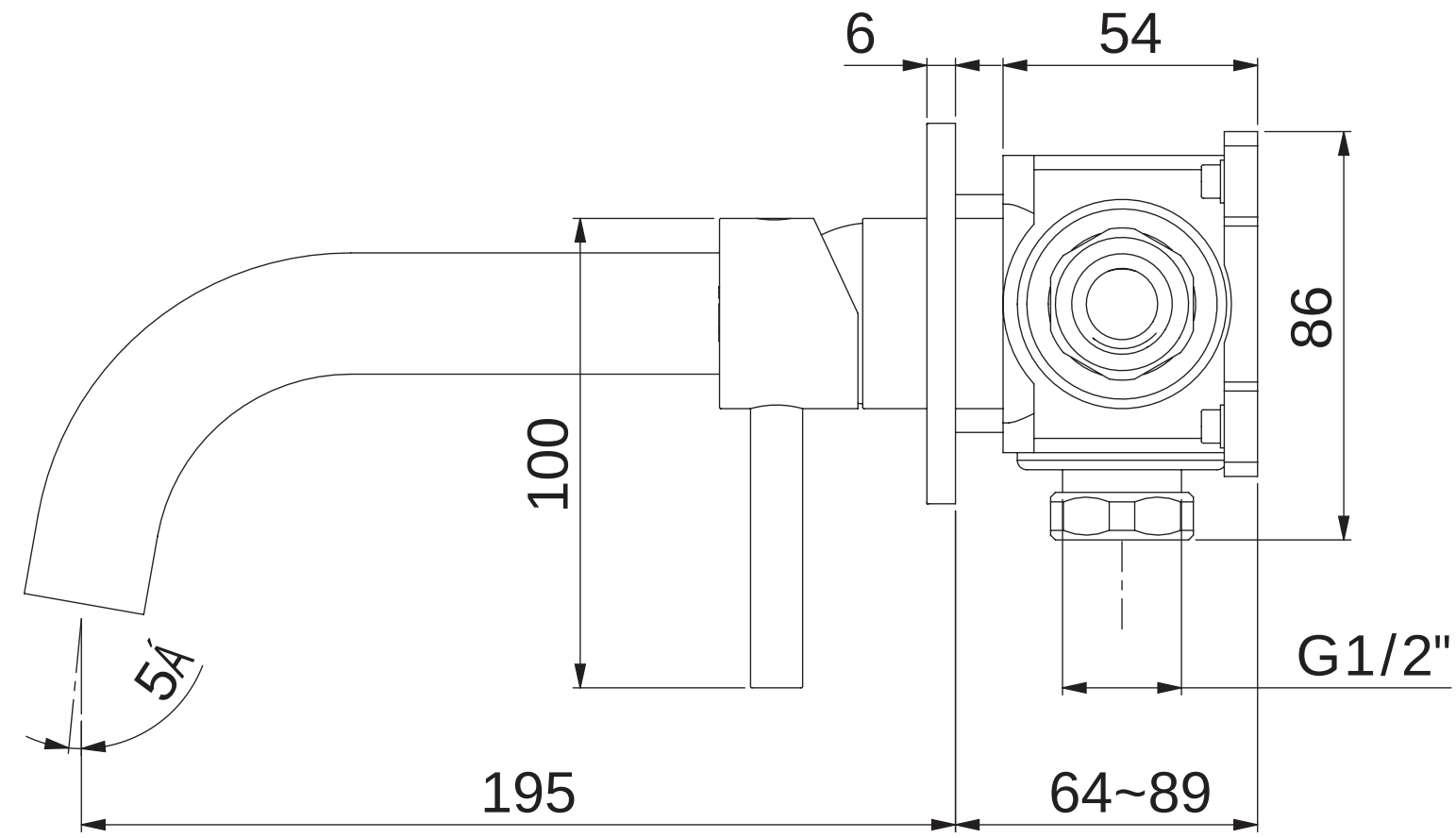

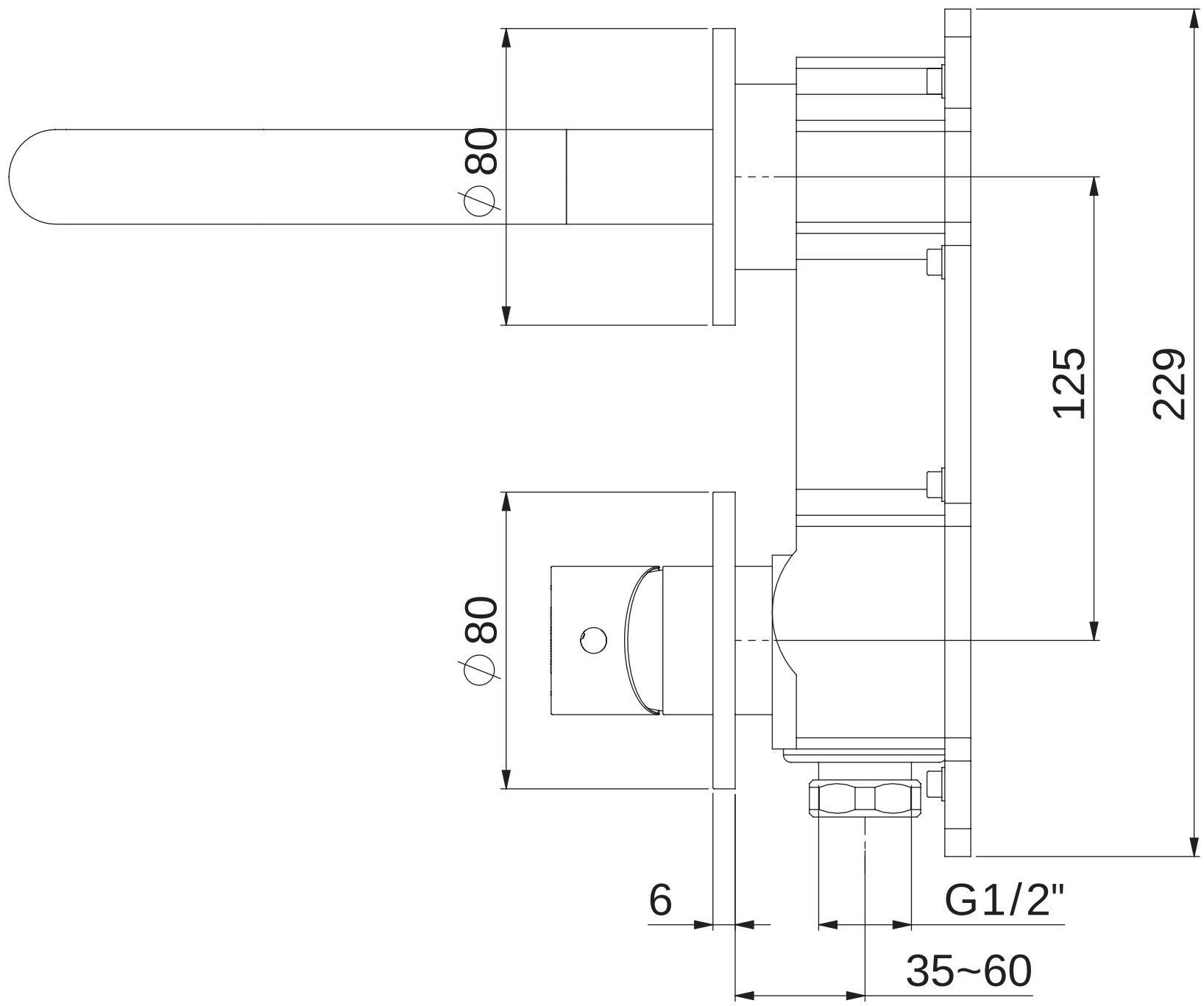

100 1814 3 RG

STEINBERG