KWC FIT
Lever mixer - Basin

Modell-Linie: FIT | 12.548.041.000FL ++
Taps | Manual taps

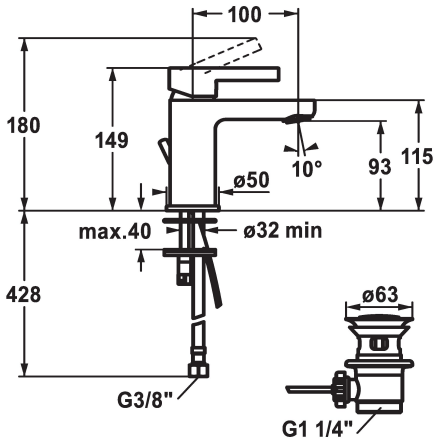

KWC-No.

12.548.041.000FL
all chrome, A 100, flexible connection hoses, with pop-up valve

12.548.051.000FL
all chrome, A 100, flexible connection hoses, without pop-up valve

- EcoProtect - water-saving device
- Fixed spout
  - Neoperl® Perlator®
- KWC cartridge M 35 OP
  - with ceramic discs
  - flow rate and temperature continuously variable
  - temperature limitation
- Flexible connection hoses ⅜"
- Fastening by means of stud bolt M8 x 1
- Mounting hole size ø35 mm
- Flow rate 5 l/min (3 bar)
- Acoustic group I